REV.	REVISION NOTE	ECN NO.	SIGNATURE	DATE
X1	NEW RELEASE		ALAN	27/JUL/09'

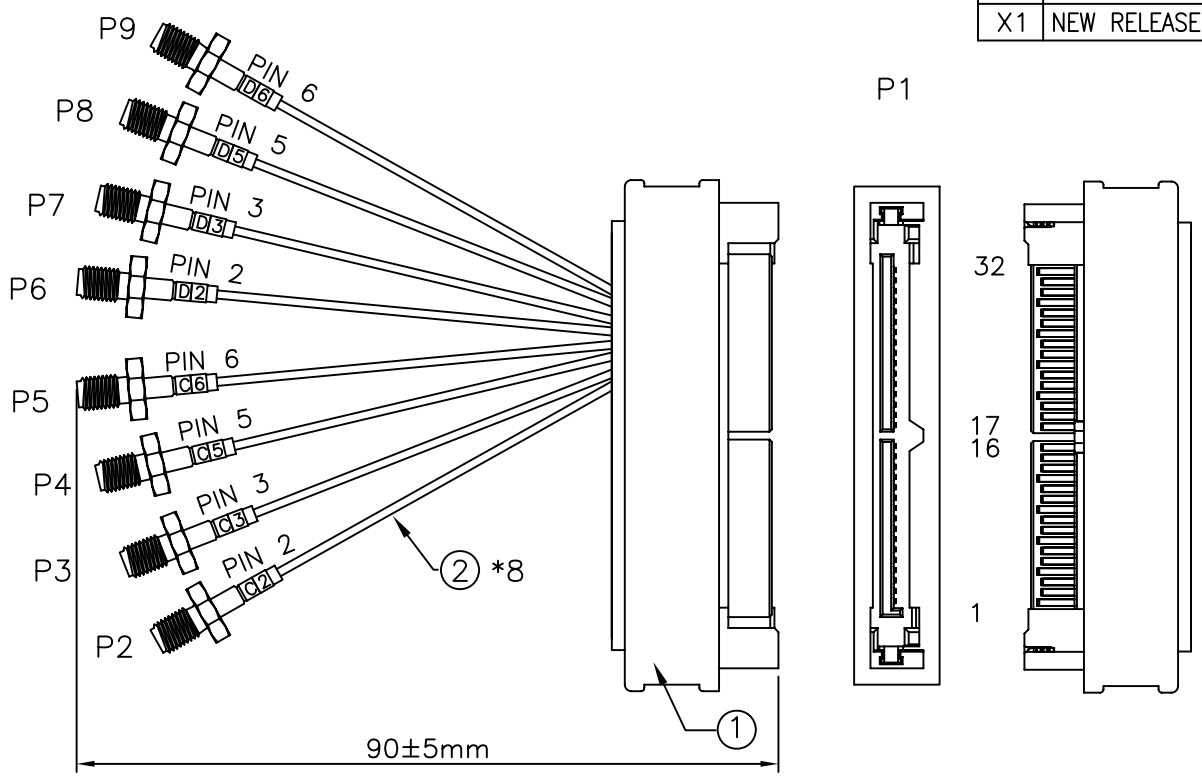

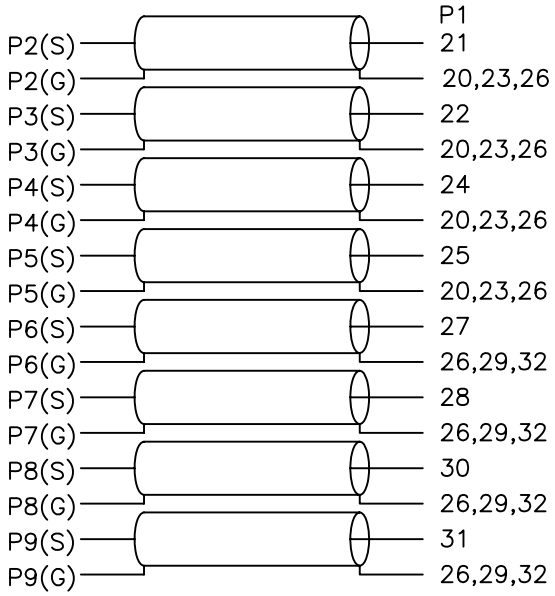

NOTES:

1-1 Impedance: (at risetime 70ps)
100±10 Ohm (Mated connectors)
50±2.5 Ohm (Single-ended)
1-2 Intra-pair skew 2ps
1-3 Near-end Xtalk -26dB (10MHz to 6GHz)
1-4 Insertion Loss less than -3db at 6GHz (Ref.)

TF-3P12-XXXX
"XXXX" is Serial Number

NO.	DESCRIPTION	Q'TY	UNIT/REF.
4	LABEL OF SERIAL NUMBER	1	
3	TAPE COLOR: BLACK	1	
2	HIGH FREQUENCY SEMI-RIGID CABLE WITH SMA FEMALE	8	P2~P9
1	SAS 32PIN SFF-8484 MULTILANE PLUG CONNECTOR BLACK	1	P1

UNIT mm | SHEET 1 OF 2

SCALE ———

CUSTOMER

DRAWN BY *Alan* 27/JUL/09'

CHECKED BY *Steven* 27/JUL/09'

APPROVED BY *Jerry* 27/JUL/09'

ICT SOLUTIONS

TITLE
SAS PLUG TEST FIXTURE

DRAWING NO:
TF-3P12

CUSTOMER P/N:

THIS DRAWING CONTAINS INFORMATION THAT IS PROPRIETARY TO ICT SOLUTIONS LTD. AND SHOULD NOT BE USED WITHOUT WRITTEN PERMISSION